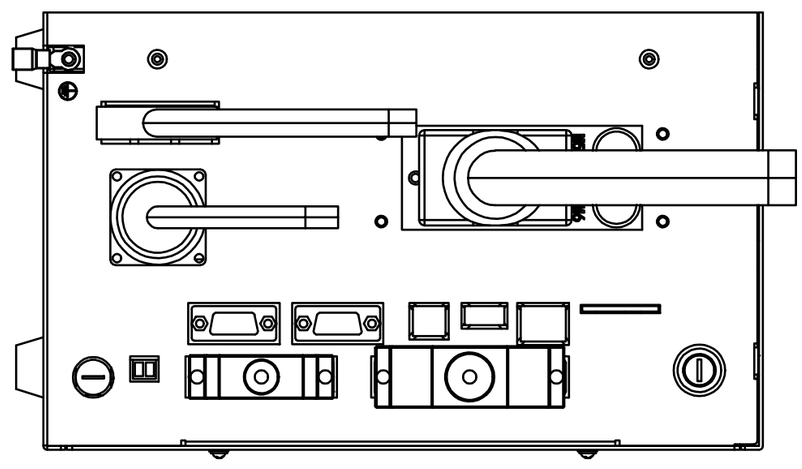

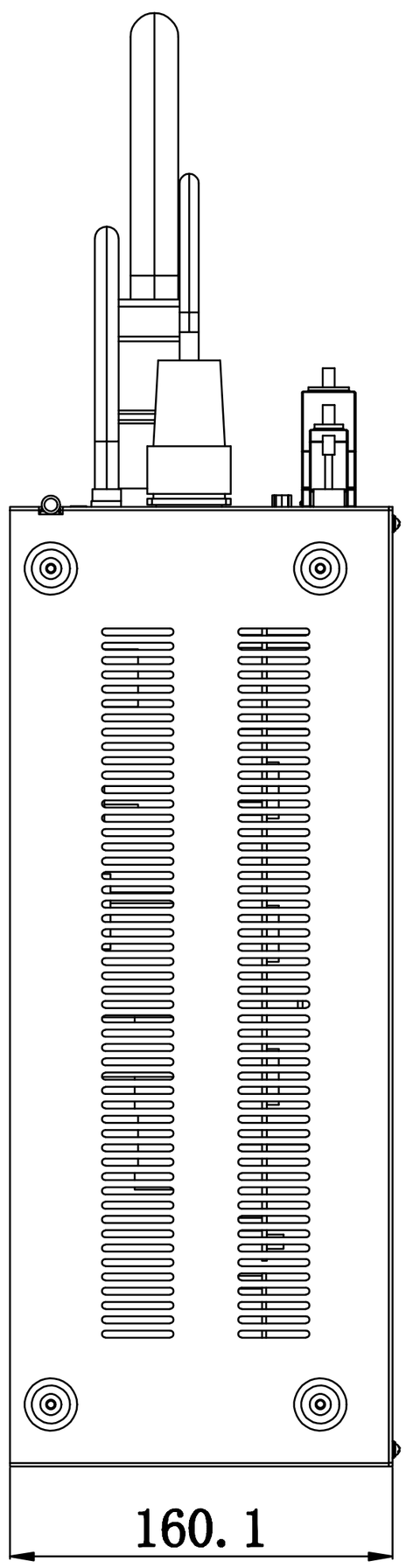
160.1

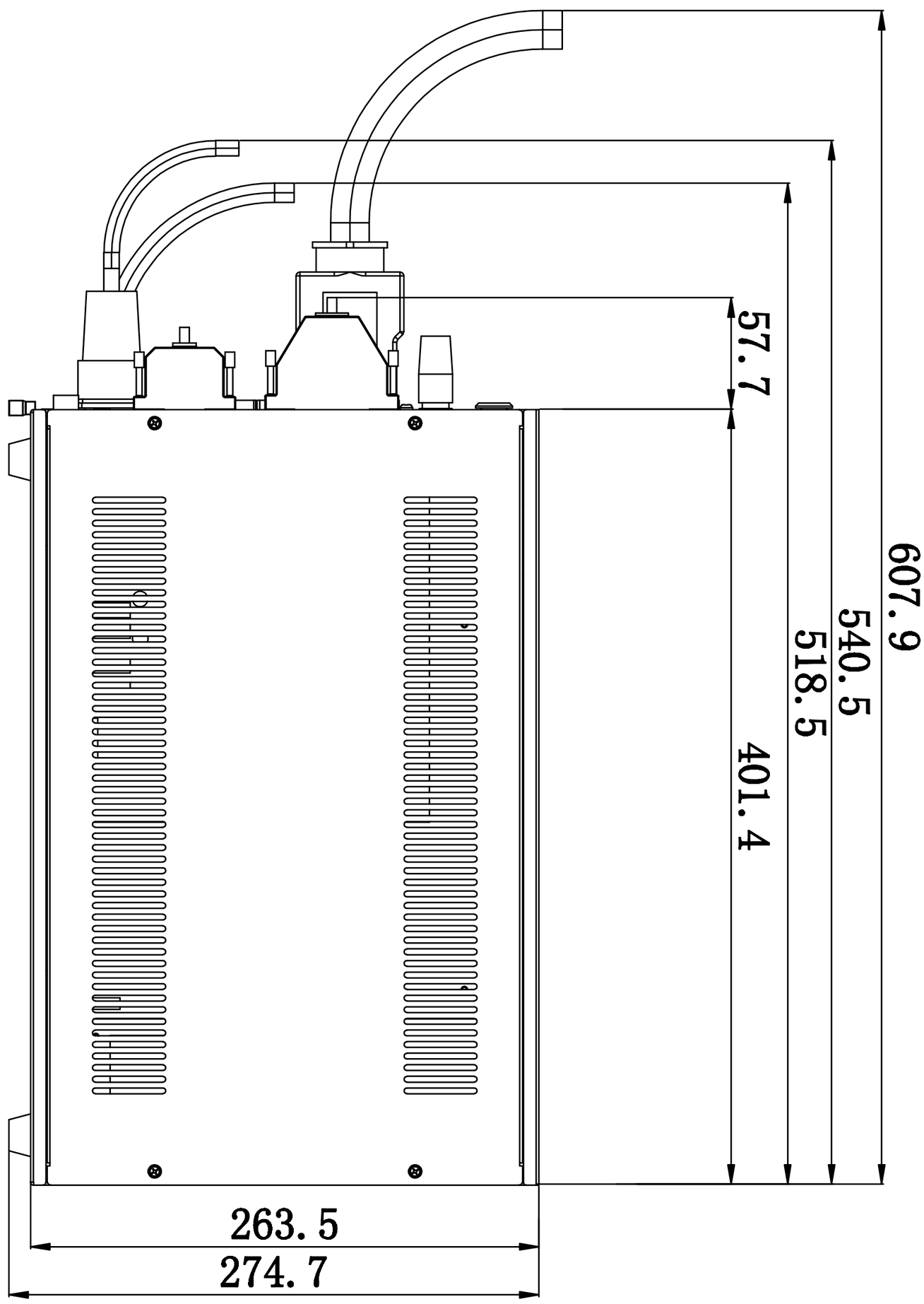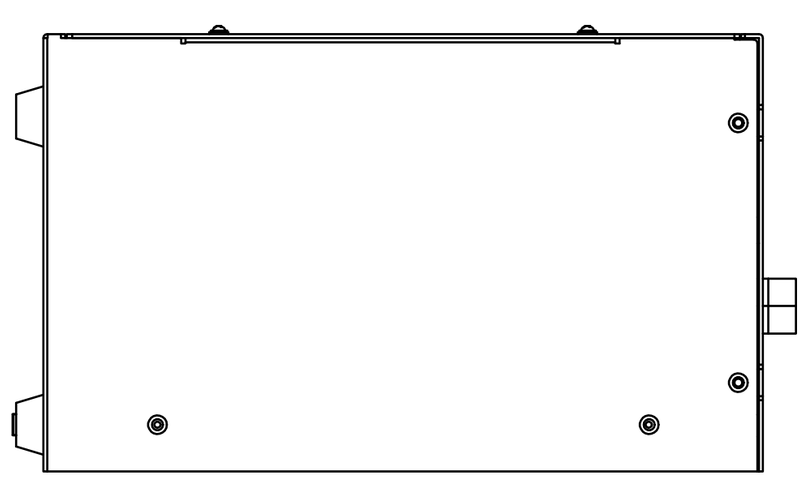
57.7
607.9
540.5
518.5
401.4
263.5
274.7